KOSTER AMERICAN CORP. - 2585 AVIATOR DRIVE - VIRGINIA BEACH, VA 23451- PHONE 757 425 - 1206
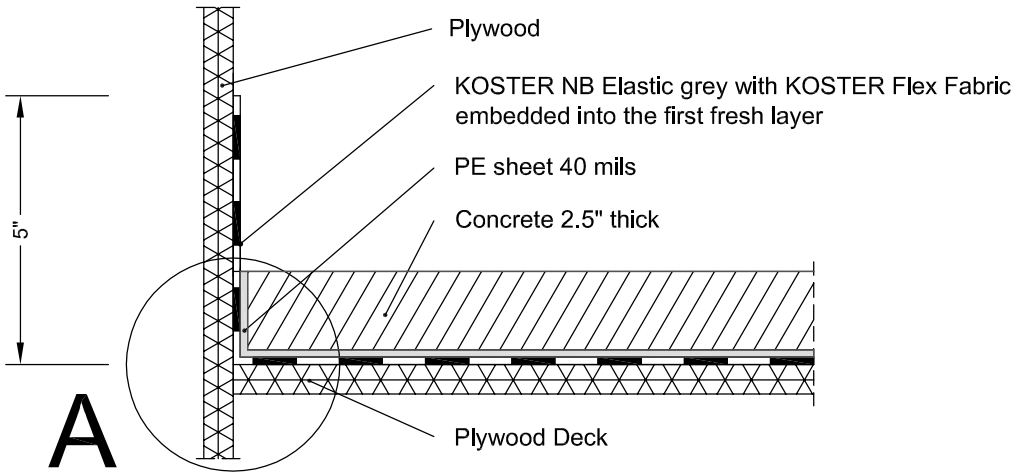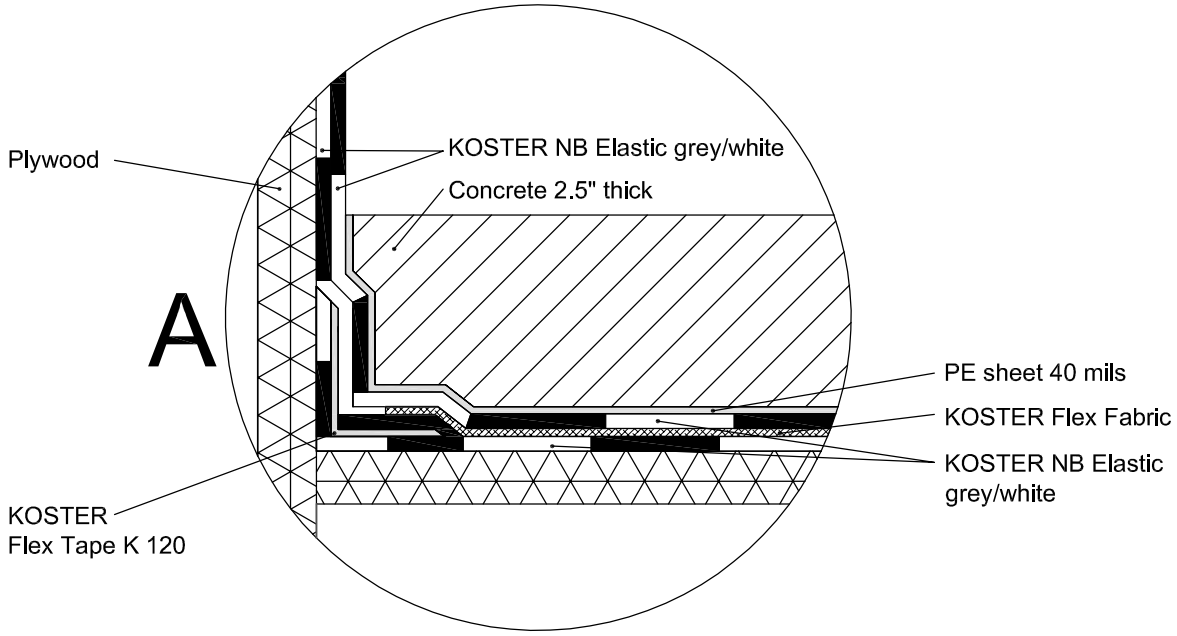
Balcony - Wall